Intelligent Systems with Applications 29 (2026) 200618

Contents lists available at ScienceDirect

Intelligent Systems with Applications

journal homepage: www.journals.elsevier.com/intelligent-systems-with-applications

UAV exploration for indoor navigation based on deep reinforcement learning and intrinsic curiosity

Huei-Yung Lin [a,b,*], Xi-Sheng Zhang [b], Syahrul Munir [a,c]

[a] Department of Computer Science and Information Engineering, National Taipei University of Technology, 1, Sec. 3, Zhongxiao E. Road, Taipei, 106344, Taiwan
[b] Department of Electrical Engineering, National Chung Cheng University, 168 University Road, Min-Hsiung, Chiayi, 621301, Taiwan
[c] Department of Physics, Universitas Pembangunan Nasional Veteran Jawa Timur, Jl. Raya Rungkut Madya, Gunung Anyar, Surabaya, Indonesia

ARTICLE INFO

Keywords:
Unmanned aerial vehicles
Indoor exploration
Vision-based navigation
Deep reinforcement learning
Intrinsic curiosity

ABSTRACT

The operational versatility of Unmanned Aerial Vehicles (UAVs) continues to drive rapid development in the field of UAV. However, a critical challenge for diverse applications — such as search and rescue or warehouse inspection — is exploring the environment autonomously. Traditional exploration approaches are often hindered in practical deployments because they require precise navigation path planning and predefined obstacle avoidance rules for each of the testing environments. This paper presents a UAV indoor exploration technique based on deep reinforcement learning (DRL) and intrinsic curiosity. By integrating the reward function based on the extrinsic DRL reward and the intrinsic reward, the UAV is able to autonomously establish exploration strategies and actively encourage the exploration of unknown areas. In addition, NoisyNet is introduced to assess the value of different actions during the early stages of exploration. This proposed method will significantly improve the coverage of the exploration while relying solely on visual input. The effectiveness of our proposed technique is validated through experimental comparisons with several state-of-the-art algorithms. It achieves around at least 15% more exploration coverage at the same flight time compared to others, while achieving at least 20% less exploration distance at the same exploration coverage.

1. Introduction

Unmanned Aerial Vehicles (UAVs) are highly adaptable robotic platforms with a wide range of practical applications. They can perform tasks such as aerial surveillance, agricultural monitoring, search and rescue missions, supply delivery, and warehouse inspections. Traditionally, many of these operations are based on manual remote control by skilled pilots. However, in many cases, such as in dangerous or time-sensitive environments, autonomous operations are not only beneficial but also essential. With rapid advances in sensor technology, onboard computing, and artificial intelligence, modern drones are increasingly capable of navigating and performing tasks independently (AlMahamid & Grolinger, 2022; Ye, Song, Zhang, & Zeng, 2023). In disaster zones, autonomous drones are used to assess damage, locate survivors, and deliver urgent supplies without putting human lives at risk. In agriculture, they can scan vast fields, detect crop health problems, and apply treatments with precision (Su, Zhu, Li, & Chen, 2023). Similarly, in logistics and infrastructure maintenance, drones can be used to independently inspect areas difficult to reach, such as pipelines, bridges, or stacked shelves, reducing both time and risk (Boroujeni et al., 2024; Perry, Guo, Atadero, & Van De Lindt, 2020). As a necessity to reduce human operation and intervention in future developments in this scope of tasks, autonomous environment exploration plays an essential role for UAV navigation (Lin, Chang, & Huang, 2024; Rezwan & Choi, 2022).

Achieving robust UAV navigation requires the UAV to perform several critical tasks simultaneously. These include path planning, obstacle avoidance, and global localization. Although significant research has addressed path-planning strategies, such as Azubairi, Petunin, Alwan, Msallam, and Humaidi (2025), Gao et al. (2023) and Muhammed, Flaieh, and Humaidi (2022), the effectiveness of any planning algorithm is fundamentally dependent on the quality of the initial pose estimation. An inaccurate or unreliable localization system can render even the most sophisticated path planner ineffective, leading to mission failure or collision. This challenge is particularly acute in indoor environments, which are inherently GPS-denied. In such settings, the system must rely entirely on its on-board sensors. This introduces further complexities, as visual data can be compromised by poor illumination, requiring techniques such as image enhancement (Fan et al., 2025; Zhou et al., 2024), or may require sophisticated feature

* Corresponding author at: Department of Computer Science and Information Engineering, National Taipei University of Technology, 1, Sec. 3, Zhongxiao E. Road, Taipei, 106344, Taiwan.
E-mail address: lin@ntut.edu.tw (H.-Y. Lin).

https://doi.org/10.1016/j.iswa.2025.200618
Received 22 September 2025; Received in revised form 20 November 2025; Accepted 8 December 2025
Available online 16 December 2025
2667-3053/© 2025 The Authors. Published by Elsevier Ltd. This is an open access article under the CC BY-NC license (http://creativecommons.org/licenses/by-nc/4.0/).

extraction from different image sources to identify key objects (Zheng et al., 2025; Zhou et al., 2025). Although these individual components of perception, planning, and localization are crucial, the overarching goal is to integrate them into a cohesive strategy for autonomous exploration. Therefore, developing a robust and efficient visual exploration algorithm for complex indoor environments remains a primary challenge.

In the existing literature, exploration algorithms for unknown spaces are largely based on traditional approaches such as sampling-based and frontier-based methods (Ladosz, Weng, Kim, & Oh, 2022; Tan, Mohd-Mokhtar, & Arshad, 2021). Although these methods have demonstrated practical utility, they also have great significant limitations in complex environments. Sampling-based methods (Dang et al., 2020; Dharmadhikari et al., 2020; Papachristos, Khattak, & Alexis, 2017; Schmid et al., 2020) often tend to focus excessively on local regions, potentially overlooking unexplored but important areas. This can lead to inefficient resource allocation and reduced efficiency. Moreover, this strategy may suffer from suboptimal path planning at the global level due to the overemphasis on local exploration. In the frontier-based approach (Cieslewski, Kaufmann, & Scaramuzza, 2017; Feng, Li, Gao, Zhou, & Shen, 2023; Zhou, Zhang, Chen, & Shen, 2021), it is necessary to carefully manage both time complexity and boundary uncertainty, as the frontier calculation can become computationally intensive on a scale. In addition, the inherent uncertainty in defining the boundaries can reduce the reliability of the exploration results. Similarly to sampling-based algorithms, frontier-based methods often emphasize local exploration, increasing the risk of being trapped locally or repeatedly scanning already explored regions. Another significant limitation is the strong dependency on sensor accuracy. Noise or inaccuracies in sensor data can lead to misleading frontier estimates and cause incomplete or inefficient exploration paths.

The restrictions on conventional methods highlight the need for more adaptive and resilient approaches, such as reinforcement learning (Devo, Mao, Costante, & Loianno, 2022; Li, Xin, & Li, 2023). Recently, there has been a growing interest in applying reinforcement learning to address these challenges and improve exploration efficiency. It offers the potential for data-driven decision making that can dynamically balance local and global exploration goals based on experience and environmental feedback. Using the capabilities of deep reinforcement learning, the agent can learn directly from environmental feedback without relying on predefined exploration rules or preliminary path planning algorithms. The agent could dynamically adjust its policy and action strategy based on interactions with the environment and the rewards received at each step and episode. This allows the agent to develop an adaptive behavior that seeks globally optimal exploration paths. In the field of reinforcement learning, research dedicated specifically to three-dimensional environmental exploration for complete coverage is relatively limited (Cimurs, Suh, & Lee, 2021; Faryadi & Mohammadpour Velni, 2021; Seel, Kreutzjans, Küster, Stonis, & Overmeyer, 2022). Most existing approaches integrate reinforcement learning with traditional techniques to generate a series of target points, and reinforcement learning is applied for path planning to navigate toward these points. While this hybrid approach offers some advantages, its still need some human interventions to make it work for each kind of environments.

In this work, we employ a vision-based approach to acquire depth images and extract 3D point clouds from the environment. The exploration area is computed to establish the state space. With the development of deep-reinforcement learning models and designed reward mechanisms, this study assesses expected rewards across different action spaces from the current state. Unlike traditional or hybrid methods, this fully learning-driven approach provides greater autonomy, improved flexibility, and better generalization between different types of three-dimensional environments. The main contributions of this paper are as follows.

- Develop a novel deep-reinforcement learning (DRL) framework for the indoor exploration of UAV navigation based on visual information.
- Introduce a novel dense and sparse reward function that utilizes the current state information of UAV and the reward from Intrinsic Curiosity Module to stimulate the agent towards unexplored regions.
- Integrate NoisyNet into the DRL framework to enhance exploration effectiveness by allowing the agent to produce varied actions.
- Provide a novel comparative analysis of the exploration algorithm in different environments. We show that our proposed DRL-based method is significantly more robust and effective in these challenging conditions.

2. Related work

2.1. Traditional exploration approaches

In traditional exploration algorithms, the main categories are sampling-based and frontier-based approaches. Sampling-based methods are generally considered more focused on precise reconstruction, while frontier-based methods emphasize rapid space exploration. In sampling-based techniques, the space is explored by randomly generating sampling points. The classic next-best-view (NBV) algorithm utilizes rapidly-exploring random tree (RRT) to grow an exploration tree from the starting position and create multiple branches with several nodes (Burusa, van Henten, & Kootstra, 2024; Dhami, Sharma, & Tokekar, 2024). The exploration gain for each branch is computed, and the one with the highest gain is selected for the agent to follow. Once the best branch is chosen, others are removed and the tree is expanded. This process repeats until the entire space is explored.

The online informative path planning (OIPP) (Schmid et al., 2020) presents an approach for the continuous expansion and maintenance of an exploration tree based on RRT* to maximize the value of a single objective function. During the expansion of an exploration tree, local and global strategies are adopted to generate new sampling points as candidate nodes. Similarly to the RRT* algorithm, OIPP attempts to connect each neighboring node during expansion and selects the parent node that maximizes the value of the node. After executing the trajectory of a node, it is set as the new root of the tree. An adaptive update mechanism is then used to update the corresponding nodes based on changes on the map. In addition, to optimize the global trajectory, this approach considers reconnecting non-executed branches to achieve a continuously expanding and maintained exploration tree.

The frontier-based method proposed in Wang, Zhang, Lyu, Yan, and Chen (2024) and Zhang et al. (2024) enables the rapid exploration of an environment using the concept of frontiers to represent the boundary between known free space and unknown regions. Traditional methods generally involve searching for the optimal frontier on a global map, which is computationally intensive and will disrupt continuous exploration. To address this, Cieslewski et al. (2017) focuses on the local set of frontiers in the field of view and calculates the expected velocity for each frontier point in the set. The one with the smallest velocity difference from the current speed is chosen as the flight target. This minimizes changes in speed and direction to facilitate continuous high-speed exploration. When the local frontier set is depleted, the algorithm switches to the traditional method to identify the globally optimal frontier.

Fast UAV Exploration (FUEL) (Zhou et al., 2021) introduces an incrementally updated frontier information structure (FIS) to maintain the essential information for environmental exploration. It also presents a hierarchical planner to identify the optimal global coverage path and refine local viewpoints. When establishing a new set of frontiers, the frontier information structure is computed simultaneously. An axis-aligned bounding box (AABB) approach eliminates boundaries that are

no longer boundaries to speed up the detection of frontier changes (Hor, Sung, Ma, Choi, & Hong, 2025). Subsequently, the region growing algorithm is employed to cluster the new frontiers. To avoid excessively large clusters that cannot accurately subdivide positional areas for precise exploration strategies, the principal component analysis (PCA) is adopted to divide a large cluster into smaller ones (Gewers et al., 2021). The centroids of these subdivided clusters are calculated, and uniform viewpoints are generated in a fixed-size cylindrical 3D space around each centroid. Each generated viewpoint is then evaluated, retaining only those with coverage rates above a certain threshold.

A significant disadvantage of the traditional-based exploration algorithm is that both of them struggle with efficiency and computational scaling. Most of them are stuck in the local optima, without finding the way to the global optima. In addition, both strategies suffer from computational complexity as the map grows. Frontier-based algorithms must constantly re-process the entire grid to detect new frontiers, while sampling-based methods become resource-intensive as they generate and maintain an increasingly large potential paths.

2.2. Deep reinforcement learning exploration approaches

As a branch of machine learning, reinforcement learning utilizes the interaction between an agent and its environment to maximize the rewards. By iterating over environmental states, performing actions, and receiving feedback rewards, the agent continually refines its strategy. In deep reinforcement learning, feature extraction capabilities of deep networks are combined with the reinforcement learning strategy to address complex high-dimensional control problems. There are two primary approaches: value-based and policy-based methods.

Policy-based methods involve identifying a policy function, represented by a deep neural network, to act as an actor and determine the actions that an agent should take in a given state. Since this approach directly optimizes the policy, it is particularly suitable for designs with large or continuous action spaces. Notable techniques include Proximal Policy Optimization (PPO) (Schulman, Wolski, Dhariwal, Radford, & Klimov, 2017) and the Soft Actor-Critic (SAC) algorithm (Haarnoja, Zhou, Abbeel, & Levine, 2018). PPO is an on-policy, actor-critic algorithm that stabilizes training using a clipped probability ratio, while SAC is an off-policy counterpart that uses a maximum entropy framework to enhance exploration. However, these methods have drawbacks. PPO, being on-policy, is highly sample-inefficient as it discards experience after one update. Both, as actor-critic methods, also introduce complexity by requiring the concurrent training of two networks.

In contrast, value-based methods learn a "critic-only" state–action value function, from which a policy is implicitly derived by selecting the action with the maximum Q-value. The most prominent example, the Deep Q-Network (DQN) (Mnih et al., 2013), is an off-policy algorithm prized for its high sample efficiency, which it achieves by using an Experience Replay Buffer to store and reuse past transitions. However, this approach has two major limitations. First, it is restricted to discrete action spaces, as it must compute a Q-value for every possible action. Second, the original DQN formulation suffers from a systematic overestimation of Q-values, which leads to training instability. These instabilities were addressed with critical enhancements. Double DQN (DDQN) (Van Hasselt, Guez, & Silver, 2016) mitigates overestimation bias by decoupling action selection from action evaluation. Separately, the Dueling DQN architecture (Wang et al., 2016) improves efficiency by splitting the network into two streams to independently estimate the state-value and the action-advantage. The combination of these improvements, Dueling Double DQN (D3QN), is a modern standard that offers significantly more stable training and superior performance.

Recent studies on UAV exploration have employed deep reinforcement learning techniques for environmental exploration (AlMahamid & Grolinger, 2022; Xue & Chen, 2023). In Li et al. (2023), Li et al. investigate the exploration of autonomous mobile robots using curriculum reinforcement learning (Lee, Cho, Park, & Kim, 2023) by gradually increasing the difficulty of tasks. Initially, the agent is trained in a simple environment for exploration, and the complexity of the training scenario is incrementally increased once the desired results are achieved. To address the problem of traditional curriculum learning, the cumulative curriculum reinforcement learning proposed in the paper ensures that the agent does not immediately move to a more difficult environment when switching tasks. Instead, it interacts with a vectorized environment composed of previous and new tasks (Vázquez-Canteli, Kämpf, Henze, & Nagy, 2019).

Devo et al. introduce a mixed reality framework for UAV exploration based on an asymmetric actor-critic training architecture (Devo et al., 2022). The actor network processes RGB images, while the critic network evaluates the actor's performance using the map information of obstacle, agent position, entropy, visibility, and the yaw angle and distance of the drone. To tackle the challenge of transitioning from virtual to real environments, they integrate the virtual environment with sensor data collected from drones in real application scenarios. This integration can efficiently improve the effectiveness of the deployment of trained models in real-world scenarios.

Castro et al. address the challenge of UAV path planning within dynamic agricultural environments by proposing a novel hybrid method that fuses the Rapidly Exploring Random Trees (RRT) algorithm with Deep Reinforcement Learning (DRL) (Castro et al., 2023). The core contribution lies in leveraging RRT for its efficiency in rapid map exploration, while simultaneously using DRL to manage and adapt to the highly dynamic, time-varying nature of the agricultural setting. This fused approach aims to provide a more robust and adaptive navigation solution than either technique could achieve alone in such complex environments.

Tu and Juang tackle the issue of UAV path planning and obstacle avoidance within 3D environments, highlighting applications such as aqua-culture cage inspection (Tu & Juang, 2023). Their study proposes a method centered on the Q-learning reinforcement learning algorithm to develop an efficient navigation strategy. The research, validated in an AirSim virtual environment, aims to improve autonomous flight safety and energy efficiency by optimizing the drone's path and comparing the Q-learning approach to the SARSA algorithm for these tasks.

Seel et al. integrate PX4 flight control, IMU, 3D optical LiDAR, and simultaneous localization and mapping (SLAM) into a unified system architecture for UAV exploration (Seel et al., 2022). It utilizes Dueling Double Deep Q-Learning as the foundational reinforcement learning algorithm. The optical LiDAR serves as the primary sensor for exploration and provides point cloud data. In the approach, the state space is defined by a 3D occupancy grid map and the localization information is estimated through a SLAM system. They conduct training and testing in the Gazebo environment, with a focus on specific areas where the UAV needs to perform horizontal or vertical axis avoidance maneuvers.

Although these recent approaches show good promise, they still suffer from inefficient exploration in unknown environments, causing them to get trapped in local optima. This challenge is severely amplified when relying solely on visual information, which provides only partial observability. Despite other works that try to implement sensor fusion strategies to build more rich information, it introduces significant computational load and increases the weight load of the UAV itself. To tackle these problems, this paper proposes a DRL combined with an intrinsic curiosity module (ICM) for indoor exploration of UAV. By integrating the reward function of DRL and ICM, the UAV will be able to autonomously establish exploration strategies and actively encourage exploration of unknown areas. In addition, NoisyNet is introduced to encourage the UAV to take different actions during the early stages of exploration. This proposed method will significantly improve the coverage of the exploration while relying solely on visual input.

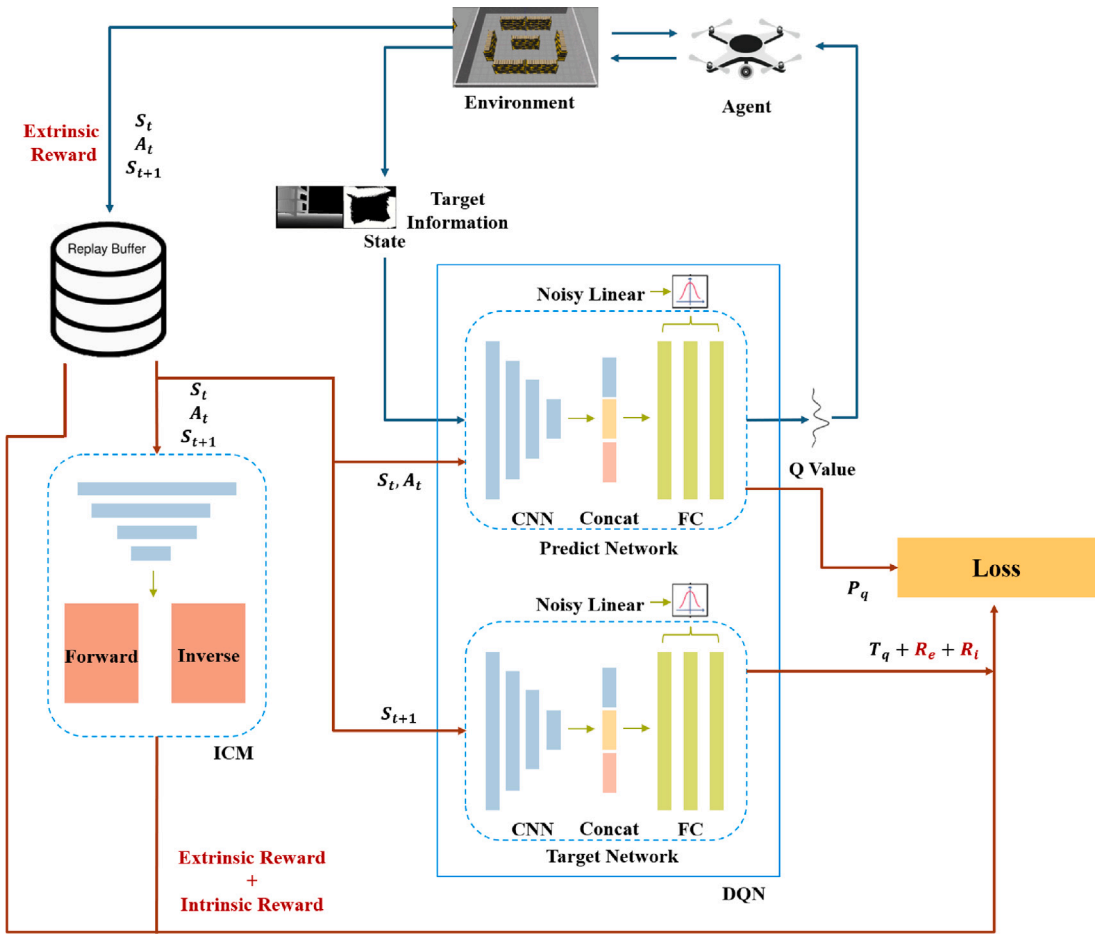

Fig. 1. The DRL exploration architecture we propose involves the interaction between the environment and the Q Predict Network to derive a series of action policies. The Experiment Replay Buffer stores experiences, enabling the Q Target Network to extract batches of historical experiences for policy optimization. The ICM module enhances the model's decision-making by utilizing errors between predictions and actual outcomes to improve cognitive understanding. It translates these errors into intrinsic curiosity rewards.

3. Method

This work utilizes depth images captured by a camera mounted on an UAV to construct state space and environmental exploration information. A deep reinforcement learning-based approach is proposed to derive action space and rewards and generate a sequence of action policies for unknown space exploration.

3.1. Architecture design

The proposed technique for UAV exploration mainly consists of two parts: 3D point cloud construction with free space computation and deep reinforcement learning for effective exploration. Fig. 1 illustrates the flow of our DRL exploration architecture. Dueling Double DQN (D3QN) is employed as the Q-value Predict Network to output the Q-values for each action. We utilize the target network to effectively address the overestimation of Q-values and the dueling network to evaluate the importance of action selection in a given state for predicting the next state while accelerating the model convergence . To allocate greater rewards for exploring more unknown areas, the Intrinsic Curiosity Module (ICM) is integrated to stimulate the model's curiosity towards unexplored regions. It calculates the error between the predicted next state and the actual next state; the larger the error, the greater the corresponding reward, which drives the model to be more curious about unknown regions. In general, an exploration framework tends to guide agents to fall into local optima. When similar state spaces are repeatedly input into the model, it may develop a preference for the same Q-values, leading to redundant exploration of previously visited areas. To mitigate this, NoisyNet is incorporated into the final fully connected layer and the advantage and value output layers. It introduces controlled noise, allowing the model to produce varied actions even when the same state is encountered.

As shown in Fig. 1, the process flow is divided into action decision-making (blue lines) and parameter optimization (red lines). In action decision-making, the state information is sent into the Predict Network to compute the expected return for each possible action. The best action is then used to control the agent. After executing the action, the agent receives the next state and the corresponding reward to proceed repeatedly. Meanwhile, the current state, next state, action, and reward are stored in the Replay Buffer. In the parameter optimization process, experiences are sampled from the Replay Buffer. The current state and action are fed into the Predict Network to estimate the Q-value, while the next state is passed to the Target Network to compute the target Q-value via temporal difference. Subsequently, the intrinsic rewards calculated by the Intrinsic Curiosity Module with the state and action inputs are added to the external rewards, and used to derive the target Q-value. Finally, the loss between the predicted and target Q-values is computed, and the model parameters are updated accordingly.

For the environment data acquisition, an RGB-D camera is mounted on the UAV to capture RGB images and depth information. These inputs are processed by Voxblox (Oleynikova, Taylor, Fehr, Siegwart, & Nieto, 2017) to generate 3D point cloud and compute the explored coverage area. Voxblox provides the probability of each voxel state to indicate whether the voxel is occupied or empty. The exploration area is then

calculated using the probability and the count of occupied voxels. In the implementation, the resolution of Voxblox, Res, is set to 0.05. All previously explored voxel states are examined, and voxels with the full occupancy rate are filtered. More specifically, the exploration area is denoted as E, and calculated by

$$E = V_{occ} \cdot Res^2 \tag{1}$$

where V_{occ} represents the occupied voxels.

3.2. Deep reinforcement learning-based exploration

The construction of our proposed DRL-based exploration framework consists of the learning environment and the reinforcement learning model. For the learning environment, the design of state space, action space, and reward function is considered. The learning model covers feature extraction and the development of reinforcement learning algorithms.

3.2.1. Learning environment

The state space represents the information perceived by the agent from the environment and the resulting changes after taking the corresponding actions. In our exploration framework, the state space is defined by image data, the occupancy grid map, and target information.

Image Data To perceive the surrounding environment for 3D scene reconstruction and obstacle avoidance, an RGB-D camera is mounted on the UAV to collect image data. The depth images from four consecutive frames are extracted and stacked. It can capture environmental changes more effectively and accumulate more detailed information about the surroundings. In addition, analyzing changes across consecutive frames provides a better feature detection capability for obstacles in the images.

Occupancy Grid Map This represents the agent's current exploration status in a 2D image format. By extracting and stacking four consecutive frames of image data, it allows for a clearer understanding of the agent's exploration progress within the environment. We utilize a graphical representation to provide the agent with contextual references and facilitate a better assessment of whether a chosen action has affected the exploration result. It also verifies how the series of actions contribute to the overall exploration.

Target Information It includes the current exploration area, and the UAV's coordinates with its yaw angle as references. Considering the total exploration area and UAV coordinates allows the agent to better understand the exploration status through a 2D exploration grid map. In addition, taking the UAV's yaw angle into account enables the agent to interpret its orientation in conjunction with image data, especially when avoiding obstacles. Consequently, the learning process is accelerated, and the agent can quickly identify the optimal solution and achieve faster convergence toward higher reward values.

3.2.2. Action space

The action space is defined by a series of actions that the UAV can take, including forward speed and turning angular velocity. It consists of discrete actions with the UAV's height fixed at 0.6 m and the forward speed set at 0.7 m per second. These are five angular velocity settings that were used in this work with the same forward speed.

- Go Forward with 0 rad/s angular velocity.
- Turn Left-Forward with $-\pi/8$ rad/s angular velocity.
- Turn Left with $-\pi/4$ angular velocity.
- Turn Right-Forward with $\pi/8$ rad/s angular velocity.
- Turn Right with $\pi/4$ rad/s angular velocity.

Table 1
The rewards adopted for our UAV exploration.

Scenario	Reward
Within 0.5 m of an obstacle	Negative
Reaching the maximum number of steps	Negative
For each action performed	Positive
Explore area percentage 95% ↑	Positive

3.2.3. Reward function

The reward function allows the model and the agent to evaluate how the actions contribute to the objective by assigning rewards or penalties. In this study, the reward design aims to enable the agent to explore unknown spaces, avoid obstacles, and maximize exploration efficiency. As shown in Table 1, an UAV within 0.5 m of an obstacle is considered to have a collision and results in a negative reward and the termination of the episode. If the UAV leaves the exploration area or the agent reaches the maximum number of steps without completing the task, a negative reward is given and applied to the end of the episode. To encourage effective exploration, the difference in the total exploration area between consecutive frames is calculated; a positive difference earns a positive reward. A small penalty is applied for each step to facilitate efficient path planning. Finally, if the total explored area reaches 95% or more of the environment, the exploration is considered complete and a large reward is given for the termination.

3.3. Policy network architecture

Deep reinforcement learning is utilized to formulate action policies in the framework, and the networks are adept at handling dimensionality issues. Since low-dimensional target and action information can be influenced by high-dimensional data, it poses challenges to the model's decision-making process. To address this, we employ convolutional neural networks (CNNs) for raw image processing and feature extraction, to reduce dimensionality through convolutional and pooling operations. For more accurate action selection, fully connected layers adopt the Dueling Deep Q-Network (DQN) (Wang et al., 2016) and NoisyNet (Fortunato et al., 2017). As depicted in Fig. 2, after extracting features from the images and target information, they are fed into fully connected layers to compute the Q-values for action selection using noisy linear layers and the Dueling Network.

3.3.1. Feature extraction network

In this work, a convolutional neural network (CNN) is used to extract image features. The input consists of four consecutive frames of depth images with a resolution of 160 × 120 pixels. Then four convolutional layers are used for feature extraction. The first layer has a kernel size of 8 × 6, a stride of 8 × 8, and 32 output channels, resulting in the size of 20 × 15 × 32. This non-square kernel size was deliberately selected to match the 4:3 aspect ratio of the 160 × 120 input. This design ensures proportional downsampling in both dimensions, preserving the spatial integrity of the scene structure while efficiently capturing coarse-grained features necessary for navigation. The subsequent layers produce output sizes of 7 × 5 × 64, 4 × 3 × 64, and 2 × 2 × 64. Finally, the extracted image features and target information are combined and fed into fully connected layers as input.

3.3.2. Duel double deep Q-learning network

To address the problem of nonlinear mapping from continuous state space to discrete action space in reinforcement learning, DQN is adopted as our framework for exploration. It is used to optimize the training process and update the model parameters for error minimization via the process

$$Q(s,a) + \alpha \left[r + \gamma \max_{a'} Q(s',a') - Q(s,a) \right] \tag{2}$$

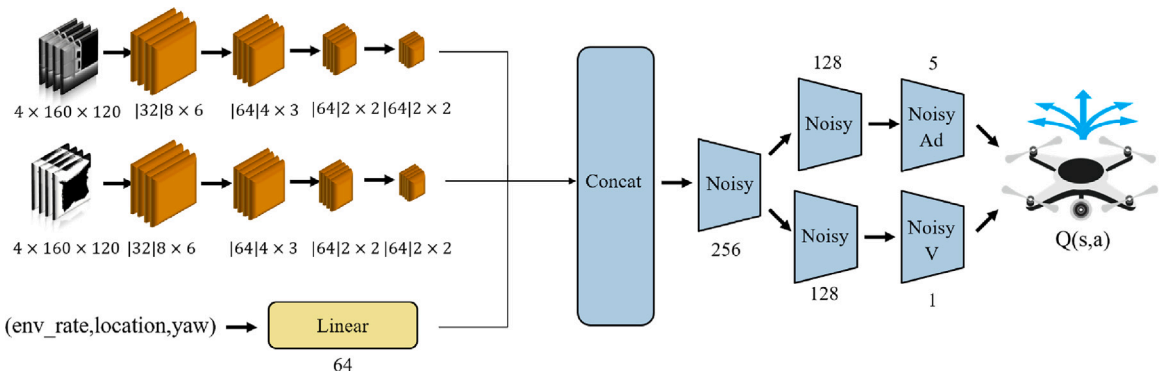

Fig. 2. The flowchart of our action decision network. The extracted image features are fed into fully connected layers. It is then followed by noisy linear layers and Dueling Network to compute the Q-values for action selection.

where α represents the learning rate, γ is the discount factor, r is the reward at the current step, s' is the next state after taking an action.

Using a single Q-network in DQN to estimate Q-values can lead to overestimation of action values due to random fluctuations. To address this issue, we employ D3QN (Dueling Double Deep Q-Learning) to combine Dueling DQN and Double DQN (Van Hasselt et al., 2016). Double DQN introduces two separate networks: a Predict Network for action selection, and a Target Network to compute the temporal difference error. The Predict Network is updated at every step, while the Target Network is updated less frequently. This setup allows the continuously updated Predict Network to gradually align with the Target Network. Based on the refined update process

$$Q(s,a) + \alpha \left[r + \gamma \hat{Q}(s', \arg\max_{a'} Q(s', a')) - Q(s,a) \right] \tag{3}$$

the separation ensures that the Q-value estimates remain accurate by preventing overestimation. Dueling DQN accelerates the convergence of learning by evaluating the value of states. Since the selected action may have little or no impact in certain states, two separate branches are used in the final output layer: one to estimate the state value and the other to estimate the advantage of each action.

3.3.3. Noisy net

Using Duel Double DQN for environmental exploration can lead to the issue that an agent repeatedly follows the same paths and gets stuck in local optima (Gök, 2024). Thus, it is necessary to encourage the agent to explore new areas for better coverage of the environment. In reinforcement learning, the epsilon-greedy strategy is a common method to balance exploration and exploitation. However, if the agent fails to explore enough areas during the early exploration phase, it may learn only optimal actions locally in limited regions. During exploitation, it can only rely on small random variations to discover alternative actions in the same states. To improve exploration efficiency, we introduce parameterized noise in the model weights based on NoisyNet (Plappert et al., 2017). More specifically, it is given by

$$y = (\mu_w + \sigma_w \odot \varepsilon_w)x + \mu_b + \sigma_b \odot \varepsilon_b \tag{4}$$

where ε is the noise of the factorized Gaussian distribution. This allows the network to learn both the mean (μ) and the standard deviation (σ) of the weights for more effective and diverse exploration.

3.3.4. Intrinsic curiosity module

To further enhance the exploration capability, the Intrinsic Curiosity Module (ICM) (Pathak, Agrawal, Efros, & Darrell, 2017) is incorporated by combining intrinsic motivation with external rewards in the deep reinforcement learning framework. Without ICM, the model relies solely on external rewards and often leads to conservative behavior, where the agent avoids exploring due to the penalty of hitting obstacles. It lies in the agent's behavior during the later stages of training, which hinders effective exploration even when new areas are discovered. ICM addresses this by allowing the agent to generate curiosity based on comparing the predicted state with the actual state, and using the prediction error as the basis for intrinsic reward. This error stimulates the agent's curiosity and encourages exploration of regions where its internal transition model performs poorly.

The ICM consists of two main components: the forward model and the inverse model. The forward model is trained to help the agent better understand what the expected next state would be after taking a specific action based on the current state. If the predicted next state differs from the actual next state, it indicates that the environment is unfamiliar or unknown to the agent. Thus, the agent's curiosity (intrinsic reward) is triggered and calculated by the mean squared error (MSE) between the predicted state $\hat{s}^i_{t+1}$ and the actual state s^i_{t+1}, scaled by a user-defined loss factor:

$$\frac{\lambda}{N} \sum_{i=1}^{N} \|\hat{s}^i_{t+1} - s^i_{t+1}\|^2 \tag{5}$$

While the forward model drives curiosity to explore unknown areas, the agent also needs to understand the consequences of its own actions to maintain control. If the agent cannot accurately predict the outcomes of its decisions, even strong curiosity will not lead to effective behavior. The inverse model trains the agent to infer actions from two consecutive states, known as inverse dynamic prediction (IDP) (Xu, Yin, Zhang, & Huang, 2021). Using the inverse prediction error given by

$$-\frac{1}{N} \sum_{i=1}^{N} \sum_{a=1}^{A} y_{i,a} \log \hat{y}_{i,a} \tag{6}$$

to train the encoder, it is ensured that the features output by the encoder remain within the agent's controllable and changeable state space. The schematic diagrams of the forward and inverse models are illustrated in Fig. 3.

3.4. Algorithm Pseudo-code

This subsection presents the main training algorithm. Table 2 details how the key components — Dueling Double DQN (D3QN) with NoisyNet for exploration and the Intrinsic Curiosity Module (ICM) for supplementary rewards — are integrated into a single, cohesive training loop. This algorithm outlines the process of action selection, combined reward calculation, and network updates via experience replay.

4. Experiments

We demonstrate the effectiveness of our approach through experiments and comparison with other methods. The objective is to apply the proposed technique to indoor environments such as warehouses and libraries. As reinforcement learning depends on learning from

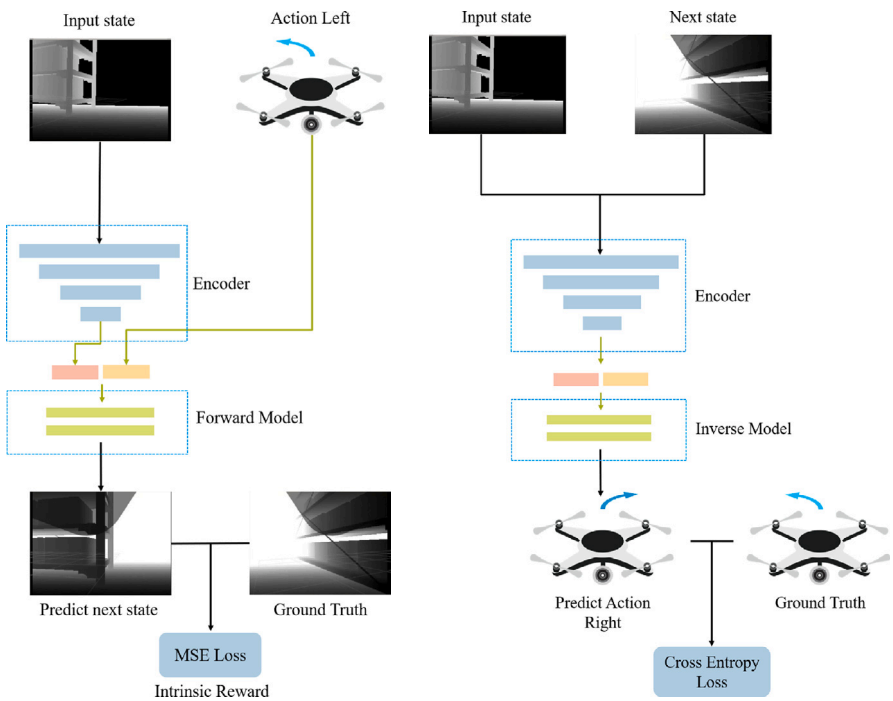

(a) The forward model. (b) The inverse model.

Fig. 3. Schematic diagrams of the forward and inverse models. The forward model is trained to better understand what the expected next state would be, and the inverse model trains the agent to infer actions from two consecutive states.

failures, we first train and validate our method in a virtual environment to ensure safety and reproducibility. The agent is placed in an unknown environment with a randomized starting position. The task is inherently about discovering the area, so there is no pre-defined destination or global path. The agent's trajectory is generated in real-time, step-by-step, purely by its learned policy.

4.1. Simulation

In the simulation for training and testing, Gazebo is used to set up the virtual scenario to model real-world objects and physical rules. We use Hector Quadrotor open-source package in the Gazebo simulator for all experiment. This high-fidelity ROS-based platform allows for rapid, safe, and reproducible testing, which is ideal for DRL-based methods that require extensive training.

To enhance the generalization of our reinforcement learning model, four different training scenarios are used. They are designed to reflect the warehouse environment with dimensions set as 15×15 m^2. The complexity and richness of the scene are varied by using different layouts of simulated shelves, as shown in Fig. 4. We use two different shelf sizes: $4 \times 1 \times 5$ m^3 and $9 \times 1 \times 5$ m^3, to increase diversity and richness. Different combinations and rotations of shelves from the scene are used to prevent the agent from merely memorizing the overall layout, ensuring that it learns to adapt to varying configurations.

4.2. Training hyperparameters

We combine Duel Double DQN with NoisyNet and the Intrinsic Curiosity Module. It requires the configuration of both DQN's original parameters and the balancing values between DQN and the Intrinsic Curiosity Module.

As the hyperparameters listed in Table 3, the maximum training episodes denote the total number of episodes for the entire training process, while the maximum training steps per episode represent the maximum number of steps the agent can take before the training of that episode is forcibly terminated. The size of the experience pool specifies how many experiences from each step can be stored. To balance the values between DQN and the Intrinsic Curiosity Module, we equally emphasize the influence of the losses from the forward model, inverse model, and the Q value by setting each of them to 1.0.

4.3. Training results

We design the rewards dense enough to allow the agent to receive external reward feedback at every step and give the intrinsic rewards continuously. For external rewards, the agent is penalized, and the episode is terminated if it collides with an obstacle or does not increase the explored area. The source of reward is the difference in the exploration area between the current and previous steps. When the agent's exploration area reaches 95% of the environment, the maximum reward is received and the episode ends. The detailed reward settings are tabulated in Table 4.

The results show that our method achieves a maximum average exploration rate close to 70% during training, with convergence starting around the 3000th episode and stabilizing around the 60% range. It indicates the effectiveness of our approach in exploration tasks.

4.4. Comparison results

For validation, we tested our trained model in the environment shown in Fig. 5 and conducted 100 exploration trials. We evaluate the proposed method and the state-of-the-art exploration algorithms using two benchmarks: time-based evaluation and exploration rate evaluation. Both experiments are conducted in validation scenarios, as shown in Fig. 5. These two different benchmarks provide a better understanding of the strengths of exploration techniques from different perspectives. For a fair comparison, we configure the algorithms with the same parameters used in our method. Note that GBP (Dang et al., 2020) and MBP (Dharmadhikari et al., 2020) originally used LiDAR as their primary sensor. To best illustrate their performance, we retain LiDAR in these methods, but adjust the sensing range to match ours at 3.0 m. The camera depth range, the LiDAR depth range, and the flight

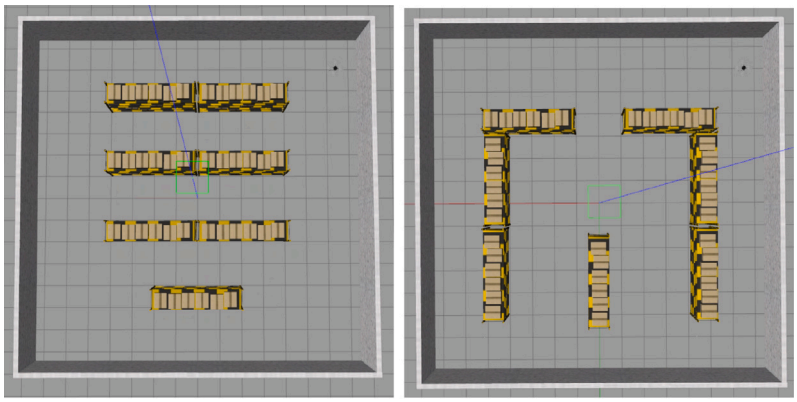

(a) Training environments with the shelf size of $4 \times 1 \times 5$ m^3.

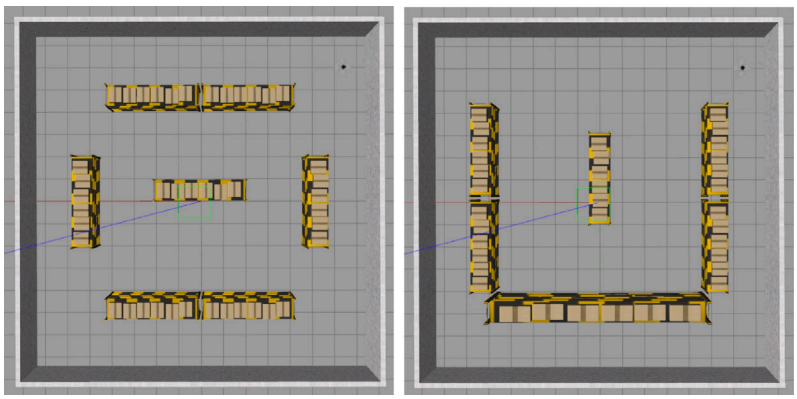

(b) Training environments with the shelf size of $9 \times 1 \times 5$ m^3.

Fig. 4. The training environments. Two different shelf size with $4 \times 1 \times 5$ m^3 and $9 \times 1 \times 5$ m^3 to increase the diversity and richness.

speed are set as 0.3 m–3 m, 0.3 m–3 m, and 0.7 m/s, respectively.

In time-based evaluation, the exploration efficiency is compared based on 145 s. This period corresponds to the time required to complete the maximum number of training steps (250 steps) in our method. It compares our proposed method with GBP, Random Linear, MBP, NBVP (Bircher et al., 2016), and OIPP (Schmid et al., 2020). All approaches run 100 trials on the test map to calculate the average exploration rate. The comparison results are tabulated in Table 5. Our method achieved an average exploration rate of 68.94%, demonstrating that the path planning learned during training can be applied effectively in the validation environment while maintaining a consistent exploration rate. At the same exploration time, other works only reach coverage areas less than 60%, indicating that our proposed method achieves a larger coverage area at the same exploration time compared to others.

To provide a clearer qualitative analysis, we present a comparison of the exploration trajectories in Fig. 5. As shown, several baseline methods do not explore the environment effectively. GBP 5(a), Random Linear 5(b), and MBP 5(c) all demonstrate poor performance by becoming trapped in local optima. Although MBP's trajectory results in slightly more coverage than the other two, all three fail to achieve a comprehensive exploration. In comparison, NBVP 5(d) and OIPP 5(e) achieve significantly better exploration coverage. However, their exploration paths are inefficient. They exhibit a repetitive "back-and-forth" pattern, revisiting the same areas multiple times before navigating to new regions. In contrast, our method 5(f) displays a much more systematic and efficient exploration strategy. The UAV first navigates along the walls to map the environment's boundaries to cover the remaining area without redundant backtracking. This superior performance is a direct result of the ICM module, which generates an intrinsic reward that actively encourages the UAV to look for and approach unexplored areas. This efficient and streamlined path is a key finding, as it demonstrates a more stable and decisive policy. The chattering seen in the other model is a common artifact of reactive DRL, where greedy action selection can cause the policy to oscillate due to minor Q-value approximation errors. As seen in Fig. 5(f), the trajectory of our method is substantially more robust, suggesting that our proposed reward structure creates a policy with less ambiguity in the Q-value.

In exploration rate-based evaluation, different methods are evaluated at fixed exploration levels of 60%, 70%, and 80%. These percentages are selected on the basis of the validation for general application scenarios, providing a substantial number of samples for practical reference. As shown in Table 6, the performance comparison focuses on the required time and length of the flight trajectories at the exploration rates. The time spent at different exploration levels helps us understand whether the technique effectively utilizes time to increase its exploration efficiency, while the length of the flight trajectories at these exploration levels allows us to assess whether an approach can effectively minimize the overlap in the paths it plans. From the results, it shows that our method achieves the shortest time to explore at every level of operation with at least 150% faster time compared with others. In addition to that, the distance that the UAV should explore at all these exploration levels when using our method shows that it achieves the least distance compared to the others with at least 20% less distance.

5. Ablation study

The ablation study is conducted with the focus on two aspects: the reward values and the proposed model for environmental exploration. Through experiments, we demonstrate how the reward design and our model components contribute to exploration efficiency.

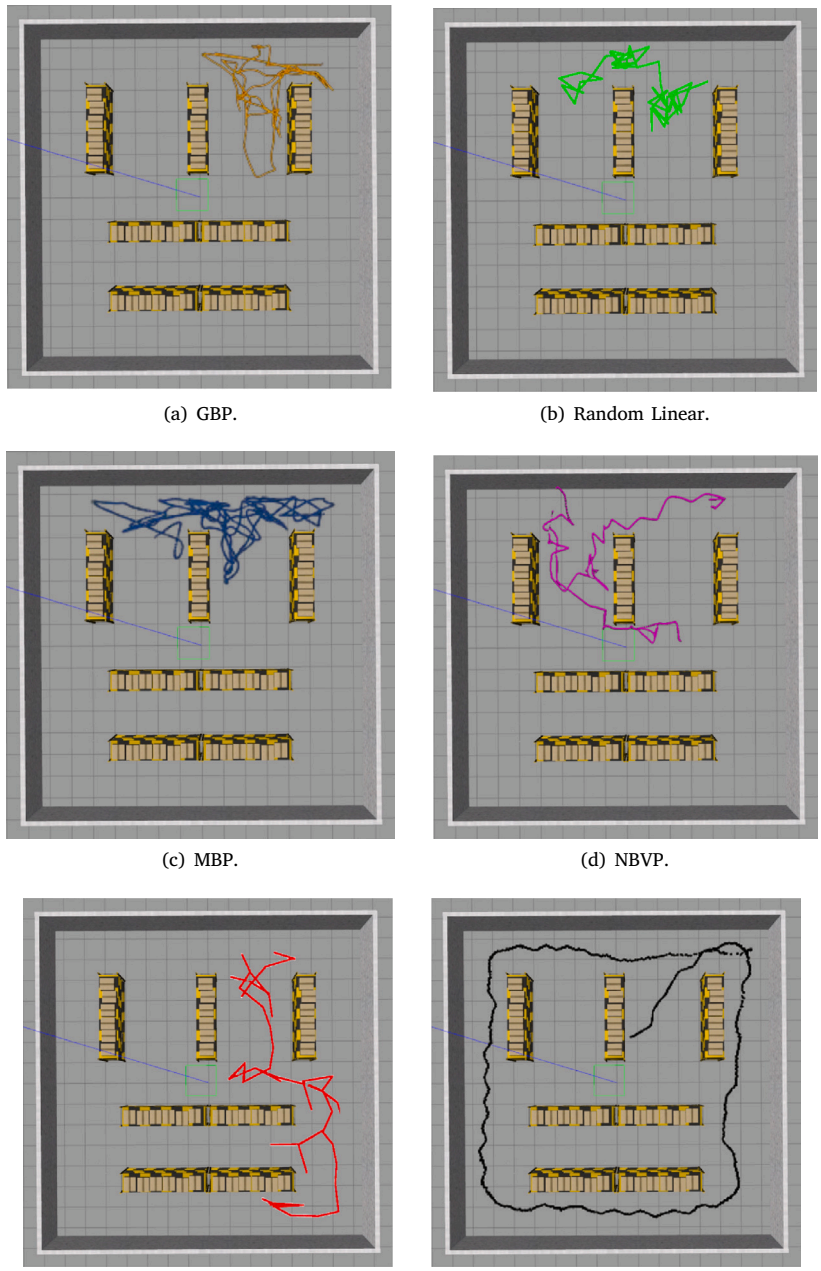

(a) GBP. (b) Random Linear.

(c) MBP. (d) NBVP.

(e) OIPP. (f) Our method.

Fig. 5. The exploration trajectories derived from different approaches (GBP (Dang et al., 2020), Random Linear, MBP (Dharmadhikari et al., 2020), NBVP (Bircher et al., 2016), OIPP (Schmid et al., 2020), and ours) in the validation environment.

Manually designing a dense reward can be quite complex and requires significant domain knowledge. In contrast, using a sparse reward can slow down the training. Thus, we investigate the training results under sparse and dense rewards for comparison and analysis. We compare our baseline dense reward against a model that combines the simple sparse reward with an Intrinsic Curiosity Module (ICM). The ICM provides a dense self-generated reward signal, which encourages exploration even when extrinsic rewards are rare. In this experiment, we heavily weigh the agent's curiosity by setting the intrinsic reward scale to 100.0. The detailed rewards design parameters are shown in Table 7 and the ablation results are shown in Fig. 6. Based on the results, it can be seen that in the early episodes, both are comparable. But in later episodes, the dense reward exploration rate starts to increase and converges at the higher exploration rate compared to using sparse reward. This suggests that while curiosity (ICM) is a useful supplement, it cannot replace a well-designed, task-focused (extrinsic) reward. Relying too heavily on intrinsic rewards can cause the agent to become 'trapped' in locally 'interesting' areas rather than completing the global exploration task.

The proposed model is based on D3QN (Dueling Double DQN) and is improved by adding the Intrinsic Curiosity Module (ICM) and NoisyNet. To demonstrate its effectiveness, three experiments are conducted including D3QN, D3QN+ICM, D3QN+NoisyNet. As shown in the red line of Fig. 7, using only D3QN for training does not produce satisfactory performance on the exploration task. It only converges at the 30% exploration rate and does not show any increase further. This is due to the high complexity and uncertainty present in unknown training environments, making it difficult for a purely reinforcement learning-based model to effectively learn and converge toward high-reward

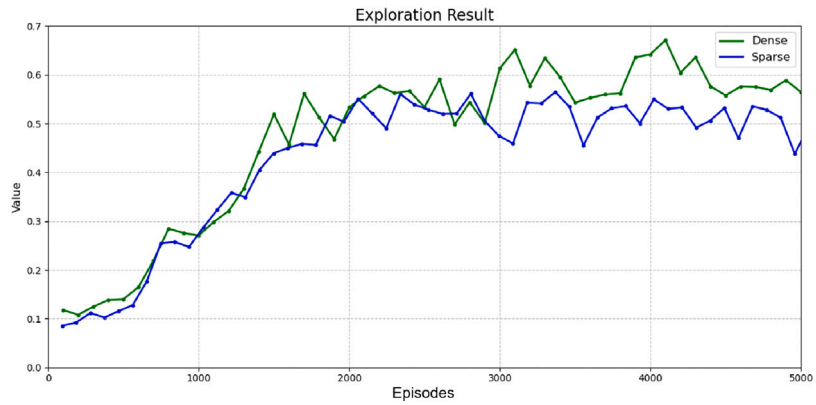

Fig. 6. The results from dense and sparse rewards in ablation experiments.

Table 2
Our proposed algorithm Pseudo-code.

Algorithm 1: DRL Exploration Loop

Initialize Replay Buffer D; main network $Q(\theta)$; target network $Q'(\theta' \leftarrow \theta)$; ICM network ICM($\phi$)
for episode = 1 **to** M **do**
  Get initial state s_1
  for t = 1 **to** T **do**
    // *Agent-Environment Interaction*
    Select action $a_t \leftarrow \arg\max_a Q(s_t, a; \theta)$ (via NoisyNet)
    Execute a_t, observe s_{t+1} and extrinsic reward r_e
    Store (s_t, a_t, r_e, s_{t+1}) in D; $s_t \leftarrow s_{t+1}$

    // *Network Training (Experience Replay)*
    Sample mini-batch of B transitions $(s_j, a_j, r_{e_j}, s_{j+1})$ from D
    // *Calculate Total Reward*
    $r_{i_j} \leftarrow \text{ICM}(s_j, a_j, s_{j+1}; \phi)$
    $r_j \leftarrow r_{e_j} + r_{i_j}$

    // *Calculate Target Q-value (T_q)*
    $a' \leftarrow \arg\max_{a'} Q(s_{j+1}, a'; \theta)$
    $T_q \leftarrow Q'(s_{j+1}, a'; \theta')$
    if s_{j+1} is a terminal state **then**
      $y_{target} \leftarrow r_j$
    else
      $y_{target} \leftarrow r_j + \gamma \cdot T_q$
    end if

    // *Calculate Predict Q-value (P_q) and Losses*
    $P_q \leftarrow Q(s_j, a_j; \theta)$
    $L_Q \leftarrow \text{Loss}(y_{target}, P_q)$
    $L_{\text{ICM}} \leftarrow \text{MSE}(\hat{s}_{j+1}, s_{j+1}) + \text{CrossEntropy}(\hat{a}_j, a_j)$

    // *Update Networks*
    Perform gradient descent on L_Q (updates θ) and L_{ICM} (updates ϕ)

    // *Update Target Network*
    if t $\mod C = 0$ **then**
      $\theta' \leftarrow \theta$
    end if

    if s_t is a terminal state **then**
      break
    end if
  end for
end for

areas. Introducing ICM allows the model to develop stronger curiosity toward novel states for further exploration. It allows the model to achieve a faster exploration rate compared to using only D3QN, as shown in the blue line of Fig. 7. The forward and inverse modules help the model better understand the consequences of its actions by learning from prediction errors. Later, by incorporating parameterized Gaussian noise through NoisyNet, our proposed model can learn to control the level of randomness during training and enhance the stability. It can be seen in the green line of Fig. 7 that our proposed model achieves a higher exploration rate compared to others.

Table 3
The hyperparameters used in the implementation.

Parameters	Value
Discount factor	0.99
Learning rate	0.0001
Maximum training episode	5000
Experience pool size	40 000
Maximum training step	250
Batch size	64
Forward scale	1.0
Inverse scale	1.0
Qloss scale	1.0

Table 4
The detailed reward setting for our model training for exploration.

Scenario	Reward
Within 0.5 m of an obstacle	−1.0
Reaching the maximum number of steps	−0.5
For each action performed	$10 * (Area_t^2 - Area_{t-1}^2) - 0.005$
Explore area percentage 95% ↑	+2.0

6. Conclusion

This paper proposes a method for 3D indoor environment exploration based on deep reinforcement learning. By incorporating NoisyNet and the Intrinsic Curiosity Module into the Duel Double DQN framework, the effectiveness of exploration training is significantly enhanced. The state information required for the exploration task is collected with a new reward design. Ablation experiments show that even under sparse reward conditions, the proposed method still achieves effective results. Compared with other exploration algorithms, our method demonstrates superior performance in both time-based and exploration rate evaluations. Trajectory maps show that our approach generates simpler paths with fewer overlaps. In the exploration rate evaluation, we have outperformed others in both time and distance metrics. It achieves at least 15% more exploration coverage at the same flight time compared to others, while achieving at least 20% less exploration distance and 150% faster time at the same level of exploration coverage. With extensive training, our method is capable of maximizing exploration efficiency using only local path planning.

Future work will focus on validating and extending the proposed framework. The primary objective is to bridge the gap between the simulation and real environments by transferring the learned policy to a physical UAV platform. Concurrently, we plan to rigorously evaluate

Table 5
The exploration result comparison of state-of-the-art techniques and our proposed method at the fixed exploration time of 145 s.

Method	Exploration rate (145 s)
Random Linear (frontier)	23.5%
GBP (LiDAR) (Dang et al., 2020)	28.9%
MBP (LiDAR) (Dharmadhikari et al., 2020)	37.3%
NBVP (Camera) (Bircher, Kamel, Alexis, Oleynikova, & Siegwart, 2016)	43.5%
OIPP (Camera) (Schmid et al., 2020)	54.6%
Our method (Camera)	**68.9%**

Table 6
The comparison of model performance in terms of exploration time and exploration distance.

Method	Exploration time (min)			Exploration distance (m)		
	60%	70%	80%	60%	70%	80%
Random Linear	9.26	12.06	14.59	167.04	215.96	258.38
MBP (Dharmadhikari et al., 2020)	4.40	5.26	7.53	232.04	271.78	353.35
NBVP (Bircher et al., 2016)	4.26	6.04	8.22	86.48	116.29	151.78
GBP (Dang et al., 2020)	4.13	13.06	18.09	137.90	481.63	656.87
OIPP (Schmid et al., 2020)	3.20	4.01	5.32	78.78	94.97	119.73
Our method	**1.04**	**1.29**	**2.01**	**50.16**	**68.32**	**92.74**

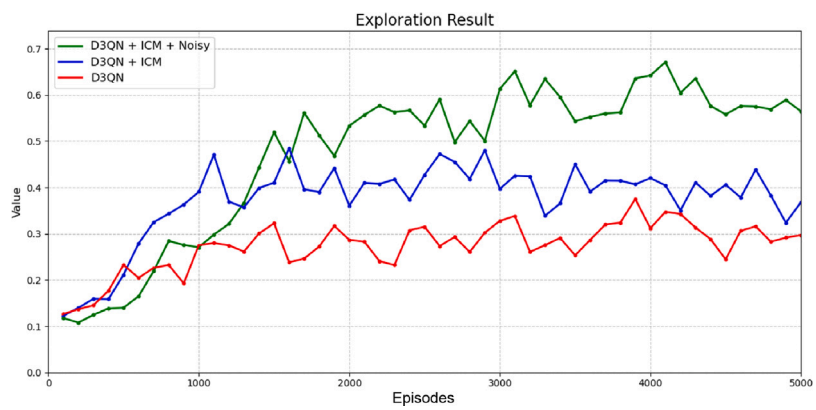

Fig. 7. The results of D3QN, D3QN+ICM, and D3QN+NoisyNet in ablation experiments.

Table 7
The detailed reward design parameters for various exploration settings.

Scenario	Reward
Within 0.5 m of an obstacle	−1.0
Reaching the maximum number of steps	−0.5
Exploration reaching 20%/40%/60%/80%	+0.1/+0.2/+0.4/+0.8
Exploration percentage 95% ↑	+2.0

the agent's generalization capabilities by testing it on a more diverse set of environments, particularly those with larger dimensions and greater structural complexity.

CRediT authorship contribution statement

Huei-Yung Lin: Conceptualization, Methodology, Investigation, Resources, Writing–original draft, Writing–review & editing, Supervision, Project administration, Funding acquisition. **Xi-Sheng Zhang:** Methodology, Software, Validation, Formal analysis, Data curation, Writing–original draft, Visualization. **Syahrul Munir:** Software, Validation, Formal analysis.

Declaration of competing interest

The authors declare that they have no known competing financial interests or personal relationships that could have appeared to influence the work reported in this paper.

Acknowledgment

The support of this work in part by the National Science and Technology Council of Taiwan under Grant 109-2221-E-194-037-MY3 is gratefully acknowledged.

Data availability

Data will be made available on request.

References

AlMahamid, F., & Grolinger, K. (2022). Autonomous unmanned aerial vehicle navigation using reinforcement learning: A systematic review. *Engineering Applications of Artificial Intelligence*, *115*, Article 105321.

Azubairi, S., Petunin, A., Alwan, H. L., Msallam, M. M., & Humaidi, A. J. (2025). Dynamic processing 2D maps method for robot's trajectory planning. *Proceedings of Engineering and Technology Innovation*, *30*, 79–89. http://dx.doi.org/10.46604/peti.2024.14508, URL https://ojs.imeti.org/index.php/PETI/article/view/14508.

Bircher, A., Kamel, M., Alexis, K., Oleynikova, H., & Siegwart, R. (2016). Receding horizon "next-best-view" planner for 3D exploration. In *2016 IEEE international conference on robotics and automation* (pp. 1462–1468). IEEE.

Boroujeni, S. P. H., Razi, A., Khoshdel, S., Afghah, F., Coen, J. L., O'Neill, L., et al. (2024). A comprehensive survey of research towards AI-enabled unmanned aerial systems in pre-, active-, and post-wildfire management. *Information Fusion*, *108*, Article 102369.

Burusa, A. K., van Henten, E. J., & Kootstra, G. (2024). Gradient-based local next-best-view planning for improved perception of targeted plant nodes. In *2024 IEEE international conference on robotics and automation* (pp. 15854–15860). IEEE.

Castro, G. G. R. d., Berger, G. S., Cantieri, A., Teixeira, M., Lima, J., Pereira, A. I., et al. (2023). Adaptive path planning for fusing rapidly exploring random trees and deep reinforcement learning in an agriculture dynamic environment UAVs. *Agriculture*, *13*(2), http://dx.doi.org/10.3390/agriculture13020354, URL https://www.mdpi.com/2077-0472/13/2/354.

Cieslewski, T., Kaufmann, E., & Scaramuzza, D. (2017). Rapid exploration with multi-rotors: A frontier selection method for high speed flight. In *2017 IEEE/RSJ international conference on intelligent robots and systems* (pp. 2135–2142). IEEE.

Cimurs, R., Suh, I. H., & Lee, J. H. (2021). Goal-driven autonomous exploration through deep reinforcement learning. *IEEE Robotics and Automation Letters*, *7*(2), 730–737.

Dang, T., Tranzatto, M., Khattak, S., Mascarich, F., Alexis, K., & Hutter, M. (2020). Graph-based subterranean exploration path planning using aerial and legged robots. *Journal of Field Robotics*, *37*(8), 1363–1388, Wiley Online Library.

Devo, A., Mao, J., Costante, G., & Loianno, G. (2022). Autonomous single-image drone exploration with deep reinforcement learning and mixed reality. *IEEE Robotics and Automation Letters*, *7*(2), 5031–5038.

Dhami, H., Sharma, V. D., & Tokekar, P. (2024). Map-nbv: Multi-agent prediction-guided next-best-view planning for active 3d object reconstruction. In *2024 IEEE/RSJ international conference on intelligent robots and systems* (pp. 5724–5731). IEEE.

Dharmadhikari, M., Dang, T., Solanka, L., Loje, J., Nguyen, H., Khedekar, N., et al. (2020). Motion primitives-based agile exploration path planning for aerial robotics. In *2020 IEEE international conference on robotics and automation*. IEEE.

Fan, L., Wei, X., Zhou, M., Yan, J., Pu, H., Luo, J., et al. (2025). A semantic-aware detail adaptive network for image enhancement. *IEEE Transactions on Circuits and Systems for Video Technology*, *35*(2), 1787–1800. http://dx.doi.org/10.1109/TCSVT.2024.3483191.

Faryadi, S., & Mohammadpour Velni, J. (2021). A reinforcement learning-based approach for modeling and coverage of an unknown field using a team of autonomous ground vehicles. *International Journal of Intelligent Systems*, *36*(2), 1069–1084.

Feng, C., Li, H., Gao, F., Zhou, B., & Shen, S. (2023). PredRecon: A prediction-boosted planning framework for fast and high-quality autonomous aerial reconstruction. In *2023 IEEE international conference on robotics and automation* (pp. 1207–1213). IEEE.

Fortunato, M., Azar, M. G., Piot, B., Menick, J., Osband, I., Graves, A., et al. (2017). Noisy networks for exploration. arXiv preprint arXiv:1706.10295.

Gao, C., Wang, X., Wang, R., Zhao, Z., Zhai, Y., Chen, X., et al. (2023). A UAV-based explore-then-exploit system for autonomous indoor facility inspection and scene reconstruction. *Automation in Construction*, *148*, Article 104753. http://dx.doi.org/10.1016/j.autcon.2023.104753, URL https://www.sciencedirect.com/science/article/pii/S0926580523000134.

Gewers, F. L., Ferreira, G. R., Arruda, H. F. D., Silva, F. N., Comin, C. H., Amancio, D. R., et al. (2021). Principal component analysis: A natural approach to data exploration. *ACM Computing Surveys*, *54*(4), 1–34.

Gök, M. (2024). Dynamic path planning via dueling double deep Q-network (D3QN) with prioritized experience replay. *Applied Soft Computing*, *158*, Article 111503.

Haarnoja, T., Zhou, A., Abbeel, P., & Levine, S. (2018). Soft actor-critic: Off-policy maximum entropy deep reinforcement learning with a stochastic actor. arXiv:1801.01290. URL https://arxiv.org/abs/1801.01290.

Hor, K., Sung, N.-J., Ma, J., Choi, M.-H., & Hong, M. (2025). A fast parallel processing algorithm for triangle collision detection based on AABB and octree space slicing in Unity3D. *IEEE Access*.

Ladosz, P., Weng, L., Kim, M., & Oh, H. (2022). Exploration in deep reinforcement learning: A survey. *Information Fusion*, *85*, 1–22.

Lee, S., Cho, D., Park, J., & Kim, H. J. (2023). Cqm: Curriculum reinforcement learning with a quantized world model. *Advances in Neural Information Processing Systems*, *36*, 78824–78845.

Li, Z., Xin, J., & Li, N. (2023). Autonomous exploration and mapping for mobile robots via cumulative curriculum reinforcement learning. In *2023 IEEE/RSJ international conference on intelligent robots and systems* (pp. 7495–7500). IEEE.

Lin, H.-Y., Chang, K.-L., & Huang, H.-Y. (2024). Development of unmanned aerial vehicle navigation and warehouse inventory system based on reinforcement learning. *Drones*, *8*(6), 220.

Mnih, V., Kavukcuoglu, K., Silver, D., Graves, A., Antonoglou, I., Wierstra, D., et al. (2013). Playing atari with deep reinforcement learning. arXiv preprint arXiv:1312.5602.

Muhammed, M. L., Flaieh, E. H., & Humaidi, A. J. (2022). Embedded system design of path planning for planar manipulator based on chaos A* algorithm with known-obstacle environment. *Journal of Engineering Science and Technology*, *17*(6), 4047–4064.

Oleynikova, H., Taylor, Z., Fehr, M., Siegwart, R., & Nieto, J. (2017). Voxblox: Incremental 3d euclidean signed distance fields for on-board mav planning. In *2017 IEEE/RSJ international conference on intelligent robots and systems* (pp. 1366–1373). IEEE.

Papachristos, C., Khattak, S., & Alexis, K. (2017). Uncertainty-aware receding horizon exploration and mapping using aerial robots. In *2017 IEEE international conference on robotics and automation*. IEEE.

Pathak, D., Agrawal, P., Efros, A. A., & Darrell, T. (2017). Curiosity-driven exploration by self-supervised prediction. In *International conference on machine learning* (pp. 2778–2787). PMLR.

Perry, B. J., Guo, Y., Atadero, R., & Van De Lindt, J. W. (2020). Streamlined bridge inspection system utilizing unmanned aerial vehicles (UAVs) and machine learning. *Measurement*, *164*, Article 108048.

Plappert, M., Houthooft, R., Dhariwal, P., Sidor, S., Chen, R. Y., Chen, X., et al. (2017). Parameter space noise for exploration. arXiv preprint arXiv:1706.01905.

Rezwan, S., & Choi, W. (2022). Artificial intelligence approaches for UAV navigation: Recent advances and future challenges. *IEEE Access*, *10*, 26320–26339.

Schmid, L., Pantic, M., Khanna, R., Ott, L., Siegwart, R., & Nieto, J. (2020). An efficient sampling-based method for online informative path planning in unknown environments. *IEEE Robotics and Automation Letters*, *5*(2), 1500–1507.

Schulman, J., Wolski, F., Dhariwal, P., Radford, A., & Klimov, O. (2017). Proximal policy optimization algorithms. arXiv preprint arXiv:1707.06347.

Seel, A., Kreutzjans, F., Küster, B., Stonis, M., & Overmeyer, L. (2022). Deep reinforcement learning based UAV for indoor navigation and exploration in unknown environments. In *2022 8th international conference on control, automation and robotics* (pp. 388–393). IEEE.

Su, J., Zhu, X., Li, S., & Chen, W.-H. (2023). AI meets UAVs: A survey on AI empowered UAV perception systems for precision agriculture. *Neurocomputing*, *518*, 242–270.

Tan, C. S., Mohd-Mokhtar, R., & Arshad, M. R. (2021). A comprehensive review of coverage path planning in robotics using classical and heuristic algorithms. *IEEE Access*, *9*, 119310–119342.

Tu, G.-T., & Juang, J.-G. (2023). UAV path planning and obstacle avoidance based on reinforcement learning in 3D environments. *Actuators*, *12*(2), http://dx.doi.org/10.3390/act12020057, URL https://www.mdpi.com/2076-0825/12/2/57.

Van Hasselt, H., Guez, A., & Silver, D. (2016). Deep reinforcement learning with double q-learning. *vol. 30*, In *Proceedings of the AAAI conference on artificial intelligence*.

Vázquez-Canteli, J. R., Kämpf, J., Henze, G., & Nagy, Z. (2019). Citylearn v1. 0: An openai gym environment for demand response with deep reinforcement learning. In *Proceedings of the 6th ACM international conference on systems for energy-efficient buildings, cities, and transportation* (pp. 356–357).

Wang, Z., Schaul, T., Hessel, M., Hasselt, H., Lanctot, M., & Freitas, N. (2016). Dueling network architectures for deep reinforcement learning. In *International conference on machine learning* (pp. 1995–2003). PMLR.

Wang, R., Zhang, J., Lyu, M., Yan, C., & Chen, Y. (2024). An improved frontier-based robot exploration strategy combined with deep reinforcement learning. *Robotics and Autonomous Systems*, *181*, Article 104783.

Xu, P., Yin, Q., Zhang, J., & Huang, K. (2021). Deep reinforcement learning with part-aware exploration bonus in video games. *IEEE Transactions on Games*, *14*(4), 644–653.

Xue, Y., & Chen, W. (2023). Multi-agent deep reinforcement learning for UAVs navigation in unknown complex environment. *IEEE Transactions on Intelligent Vehicles*, *9*(1), 2290–2303.

Ye, X., Song, F., Zhang, Z., & Zeng, Q. (2023). A review of small UAV navigation system based on multisource sensor fusion. *IEEE Sensors Journal*, *23*(17), 18926–18948.

Zhang, H., Wang, S., Liu, Y., Ji, P., Yu, R., & Chao, T. (2024). Efp: Efficient frontier-based autonomous uav exploration strategy for unknown environments. *IEEE Robotics and Automation Letters*, *9*(3), 2941–2948.

Zheng, Z., Zhou, M., Shang, Z., Wei, X., Pu, H., Luo, J., et al. (2025). Gaanet: Graph aggregation alignment feature fusion for multispectral object detection. *IEEE Transactions on Industrial Informatics*, *21*(11), 8282–8292. http://dx.doi.org/10.1109/TII.2025.3588622.

Zhou, M., Li, Y., Yang, G., Wei, X., Pu, H., Luo, J., et al. (2025). COFNet: Contrastive object-aware fusion using box-level masks for multispectral object detection. *IEEE Transactions on Multimedia*, *27*, 7444–7458. http://dx.doi.org/10.1109/TMM.2025.3599097.

Zhou, M., Wu, X., Wei, X., Xiang, T., Fang, B., & Kwong, S. (2024). Low-light enhancement method based on a retinex model for structure preservation. *IEEE Transactions on Multimedia*, *26*, 650–662. http://dx.doi.org/10.1109/TMM.2023.3268867.

Zhou, B., Zhang, Y., Chen, X., & Shen, S. (2021). FUEL: Fast UAV exploration using incremental frontier structure and hierarchical planning. *IEEE Robotics and Automation Letters*, *6*(2), 779–786.